TECHNICAL DATA

Three Phase Electric Motors - Cast Iron Frame
HE30 90 L1 4 IE2
1.5 kW / 2 Cv
1420 RPM

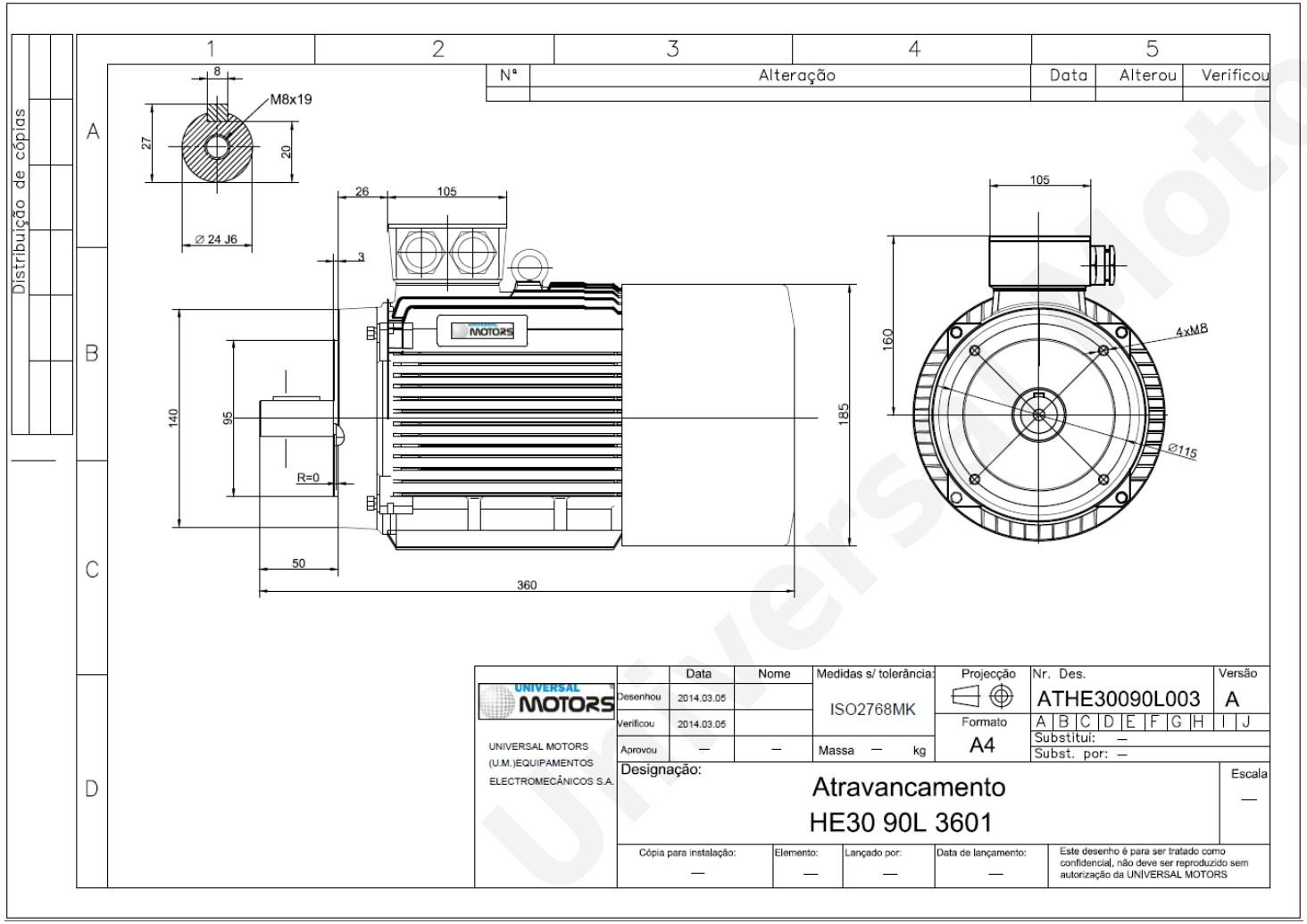

Motor type:	**HE30 90 L1 4 IE2**
Output:	**1.5 kW / 2 Cv**
Speed (min^{-1}):	**1420 RPM**
Frequency:	**50 Hz**
Voltage:	**400 V**
Current:	**3.5 A**
Power factor (Cos Ø):	**0.75**
Poles:	**4**
Insulation class:	**F**
Temperature rise Class:	**B**
Efficiency 50%:	**82.0 %**
Efficiency 75%:	**83.5 %**
Efficiency 100%:	**82.8 %**
Torque:	**10.1 N.m**
Tstarting/Tnominal:	**2.3**
Istarting/Inominal:	**7.6**
Tmaximum/Tnominal:	**2.3**
Noise:	**50 Db(A)**
Weight:	**38 Kg**
Bearing DE:	**6205 2Z C3**
Bearing NDE:	**6205 2Z C3**

Regime - S1 **Altitude - 1000m** **Environment Temperature - 40ºC**

* References applied only in the UK

CONTACTS:

UNIVERSAL MOTORS
Rua de São Brás,745
4480-782 VILA DO CONDE
Tel: +351 252 299 080
Fax: +351 252 299 089
Mail: geral@universalmotors.pt

Universal Motors